V4500-MH SERIES Installation Guide

Content

Product Overview 1
Installing the Unit 1
LED Status Indicators 1-2
Tips on Installing 2
Installing the Standard Starter Disable 3

Product Overview

The V4500-MH SERIES is a self-supporting tracking unit that requires only constant power and ground to operate. “H-Series” refers to units that are hard-wired. The unit contains two antennas: one for GPS data and the other for GSM or CDMA communication. You can easily install this unit under the dash of the vehicle for concealment.

Installing the Unit

Mounting the unit

To mount the unit, make sure the label side is facing the ground (down). Do not place the unit below a metal object as metal objects can interfere with the internal antennas’ signals. Plastic, glass, and other materials do not cause interference with the signal.

Powering up the unit

After attaching the wires and mounting the unit, power up the unit by connecting the harness. When powered up, the LED status indicators on the unit light up. See Table 1 below for descriptions on what these LED status indicators mean. It may take up to five minutes to lock in a GPS signal. If you cannot obtain a GPS signal, wait for two more minutes, reposition the unit, and then try again.

LED Status Indicators

Figure 1 displays the unit’s LED light location and Table 1 below describes the status of the unit based on the LED indicators.

Figure 1: LED light location

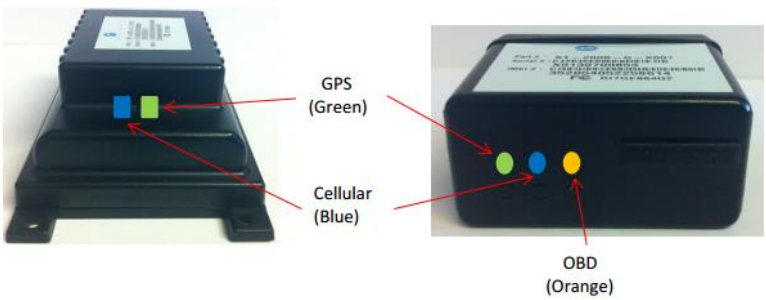

Table 1: LED status descriptions

	LED	Description	Status
2G	GSM/Cellular – Blue Light	Searching for GSM Network	Blinking once every 1 second
		GSM/Carrier Lock	Blinking once every 3 seconds
	GPS – Green Light	Searching for Satellite	Solid
		GPS Lock	Blinking
3G	GSM/Cellular – Blue Light	Searching for GSM Network	LED off
		GSM/Carrier Lock	Blinking once every 1 second
	GPS – Green Light	Searching for Satellite	Solid
		GPS Lock	Blinking
CDMA	CDMA/Cellular – Blue Light	Searching for CDMA Network	LED off
		CDMA/Carrier Lock	Blinking once every 1 second
	GPS – Green Light	Searching for Satellite	Solid
		GPS Lock	Blinking

If you need assistance pairing your device(s), please contact UTTI customer service at 805.232.4477.

Tips on Installing

To ensure proper installation of the V4500-MH SERIES unit, follow the listed recommendations:

- Ground the unit directly to the frame. Do not use small screws not attached to the frame for grounding.
- Splice the wires correctly and properly insulate them. Do not splice carelessly and without proper insulation.
- Make sure the device and all wiring are secured. Do not let the device and wiring hang haphazardly.
- Make sure you have proper light sequence before closing the dash.
- Use a constant 12V power supply. Do not use a pulsating 12V power supply.
- Make sure the unit is mounted with the label side facing down.

Installing the Standard Starter Disable

To install the standard starter disable:

1. Connect the starter disable relay to the 12V starter wire. Cut the wire into two parts, one connecting to the ignition switch, and the other connecting to the starter
2. Connect one part of the wire (connected to the ignition switch) to the red wire from the socket relay and then to the 12V supply.
3. Connect the white wire from the socket relay to the other part the cut wire (connected to the starter).
4. Connect the orange wire from the socket relay to the green wire from the harness device.

Figure 3: Five-wire harness with standard starter disable relay

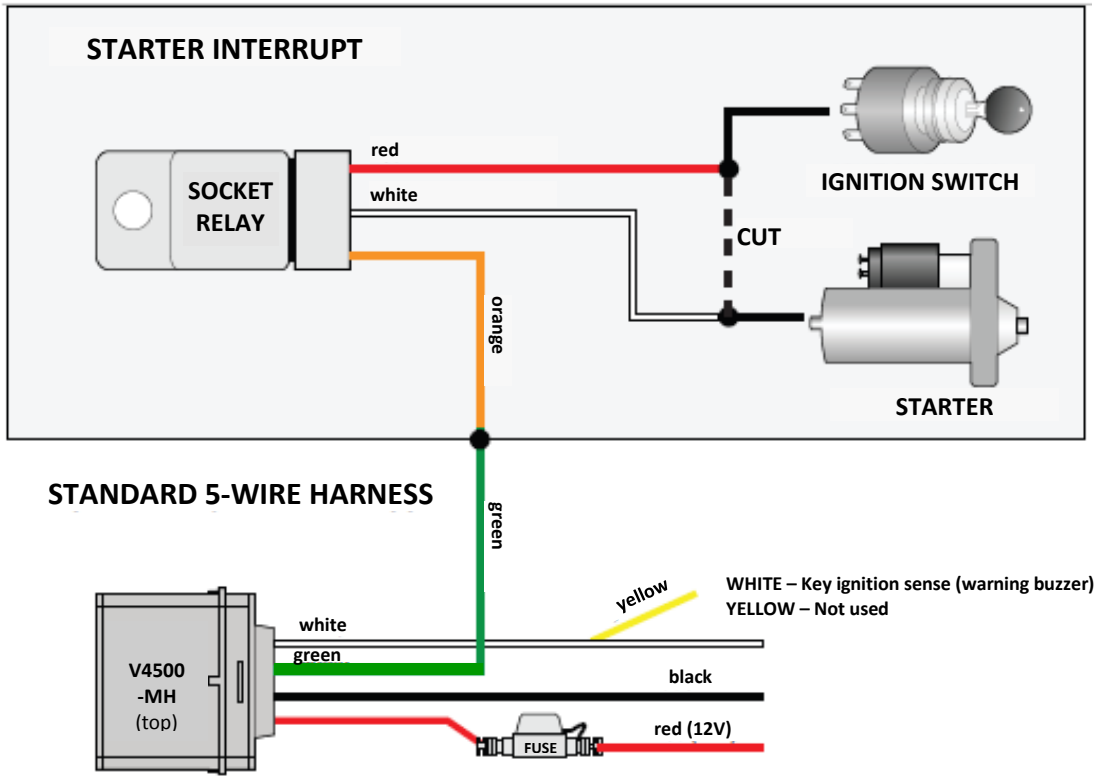

14	13	12	11	10	9	8
7	6	5	4	3	2	1

Modem Connector Pin-out and Description

PIN	PIN NAME	I/O	FUNCTIONAL DESCRIPTION	LOGIC STATE	PORT CHARACTERISTICS
1	Nc		Do Not Connect		
2	BAT-TS	I	Back-up Battery Temp. Sense		Used in conjunction with 10K NTC Battery Pack Thermistor (103AT-Type Batt. Pack Therm.) for Charge Temp Range of 0 to 45deg. C.
3	UART-RX	I	Serial Receive Port		3.3V Logic Interface Com Port Settings: Baud rate: 115200 bps; Flow control: None; 8N1
4	GND		Ground		
5	BAT-		Back-up Battery Neg. Terminal (GND)		
6	OUT	O	Output Port	Open: Short:	> 1 MOhm to ground < 1 Ohm to ground, Note: 250 mA max sink current Note: Defaulted open circuit
7	IN1	I	Ignition Sense	High: Ignition ON Low: Ignition OFF	8 to 24 V < 0.8 V Note: Internally pulled low
8	VBATT	I	Main Battery Voltage		6-24 V
9	BAT+	I/O	Back-up Battery Pos. Terminal		For Li Ion or Li Polymer Battery, 3.7V Nom Voltage. 4.2V Charging Voltage
10	UART-TX	O	Serial Transmit Port		3.3V Logic Interface Com Port Settings: Baud rate: 115200 bps; Flow control: None; 8N1
11	NC		Do Not Connect		
12	NC		Do Not Connect		
13	NC		Do Not Connect		
14	IN2	I	Input Port 2	Logic High: Logic Low:	2.4 to 16 V < 0.5 V Note: Internally pulled high